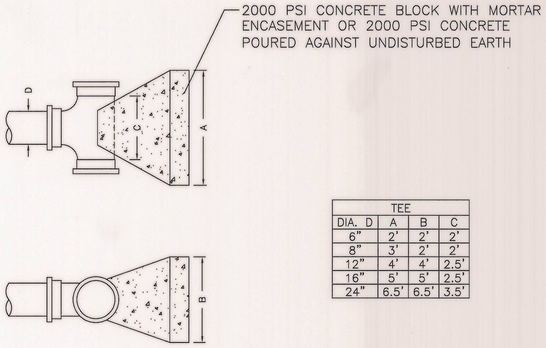

TEE			
DIA. D	A	B	C
6"	2'	2'	2'
8"	3'	2'	2'
12"	4'	4'	2.5'
16"	5'	5'	2.5'
24"	6.5'	6.5'	3.5'

THRUST BLOCK AT TEE

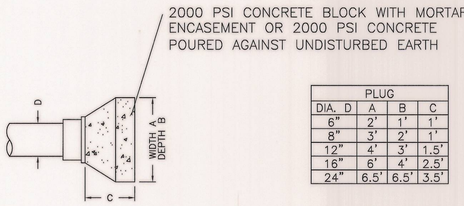

PLUG			
DIA. D	A	B	C
6"	2'	1'	1'
8"	3'	2'	1'
12"	4'	3'	1.5'
16"	6'	4'	2.5'
24"	6.5'	6.5'	3.5'

THRUST BLOCK AT PLUG

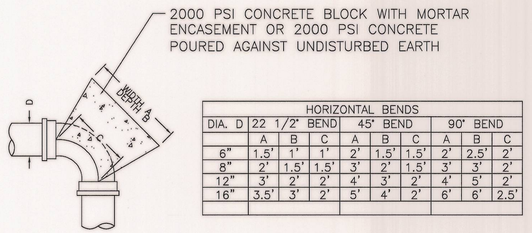

HORIZONTAL BENDS									
DIA. D	22 1/2° BEND			45° BEND			90° BEND		
	A	B	C	A	B	C	A	B	C
6"	1.5'	1'	1'	2'	1.5'	1.5'	2'	2.5'	2'
8"	2'	1.5'	1.5'	3'	2'	1.5'	3'	3'	2'
12"	3'	2'	2'	4'	3'	2'	4'	5'	2'
16"	3.5'	3'	2'	5'	4'	2'	6'	6'	2.5'

THRUST BLOCK AT 90° OR SMALLER BENDS

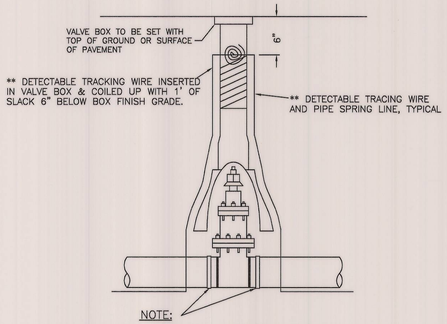

NOTE:
ALL VALVE JOINTS ARE TO BE RESTRAINED JOINTS (TYPICAL) & SUPPORTED WITH A CONC. BLOCK/PAD AND WRAPPED WITH A POLYETHYLENE ENCASEMENT. THE POLYETHYLENE FILM SHALL BE A MINIMUM 8 MIL THICKNESS AND INSTALLED PER AWWA C105.

DETAIL OF GATE VALVE AND BOX

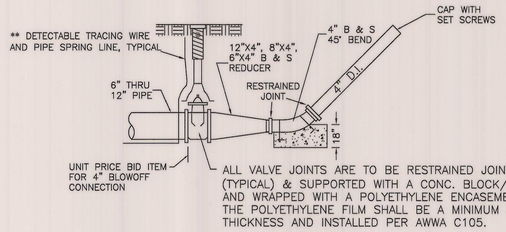

TYPICAL BLOWOFF ASSEMBLY

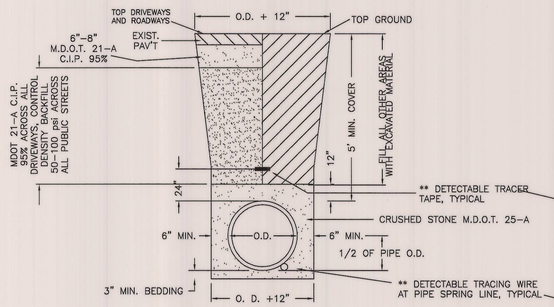

PIPE BEDDING FOR 12" AND SMALLER WM. TYPICAL TRENCH PAY LIMIT

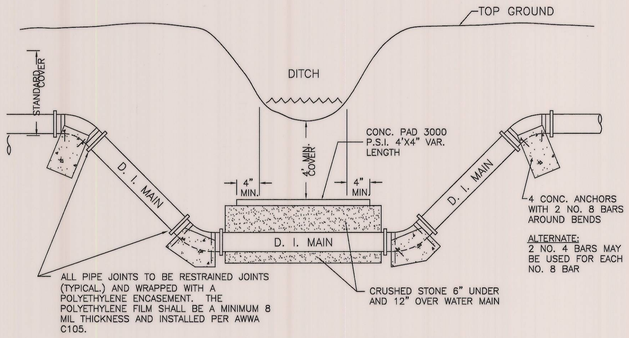

STREAM CROSSING

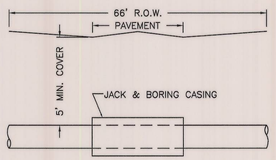

APPROVED CASING PIPE SPACERS
1) STAINLESS STEEL OR DUCTILE IRON BODY WITH ULTRA HIGH MOLECULAR WEIGHT POLYMER PLASTIC REINFORCEMENT.
2) HIGH DENSITY POLYETHYLENE (HDPE) OR NYLON BODY AND RUNNER.
* ALL CASING SPACERS SHALL BE INSTALLED PER THE MANUFACTURER SPECIFICATIONS & MANUFACTURED IN THE USA OR CANADA.

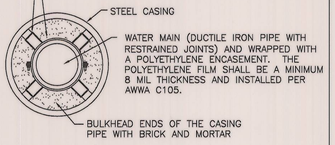

BORING AND JACKING DETAIL

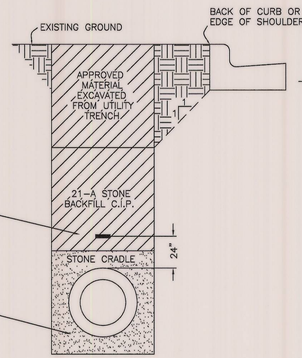

BACKFILL OUTSIDE PAV'T

** USED FOR NON - METALLIC PIPE INSTALLATIONS ONLY

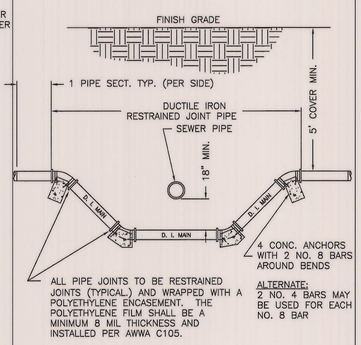

DEFLECTION FOR CONFLICT WITH UTILITIES

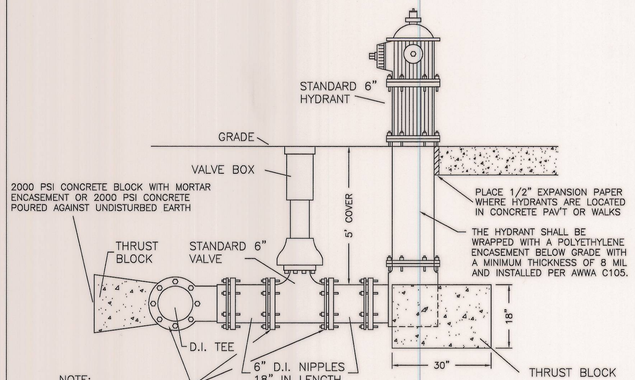

NOTE:
ALL VALVE JOINTS ARE TO BE RESTRAINED JOINTS (TYPICAL). VALVES SHALL BE SUPPORTED WITH A CONC. BLOCK/PAD AND WRAPPED WITH A POLYETHYLENE ENCASEMENT. THE POLYETHYLENE FILM SHALL BE A MINIMUM 8 MIL THICKNESS AND INSTALLED PER AWWA C105.

STANDARD HYDRANT SETTING

FIRE HYDRANT MODELS:
EAST JORDAN IRON WORKS 5BR-250
MUELLER 5-1/4" MODEL NO. SUPER CENTURION 250

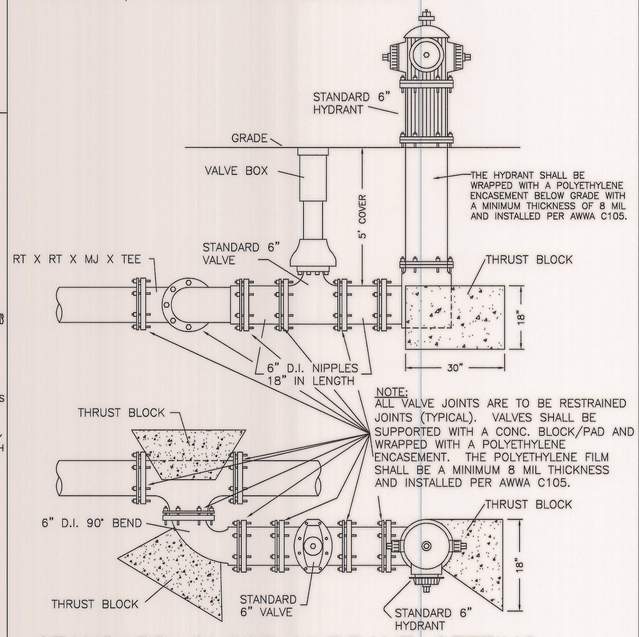

NOTE:
ALL VALVE JOINTS ARE TO BE RESTRAINED JOINTS (TYPICAL). VALVES SHALL BE SUPPORTED WITH A CONC. BLOCK/PAD AND WRAPPED WITH A POLYETHYLENE ENCASEMENT. THE POLYETHYLENE FILM SHALL BE A MINIMUM 8 MIL THICKNESS AND INSTALLED PER AWWA C105.

STANDARD CLOSE HYDRANT SETTING

NOTE: SEE SHEET 2 OF 2 FOR NOTES.

REVISIONS		
NO.	DRAWN BY:	DATE:
11	BKS	FEB., 2002
12	BSL	MARCH, 2004
13	BKS	MAY, 2005
14	DGC	JUNE, 2005
15	JR	JUNE, 2006
16	JR	MARCH, 2007
17	JR	OCT., 2007
18	PML	JULY 2010

DWG. OF RECORD
DATE:

CITY OF MONROE, MICHIGAN
ENGINEERING DEPARTMENT

WATER DETAILS

SCALE: NONE
FILE NO. F-587A
DATE: AUSGUST, 1990
SHEET NO. 1 OF 2
APPROVED: Patrick M. Lewis
CITY ENGINEER